REV	ECO	DESCRIPTION	DATE	BY
A	3781	RELEASED	2-1-11	DS
B	3866	SEE ECO	05-08-12	DS

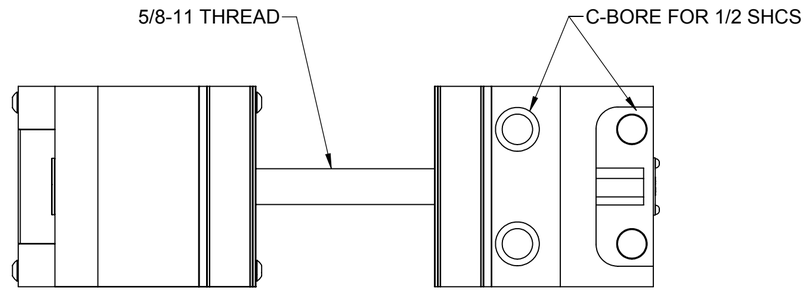

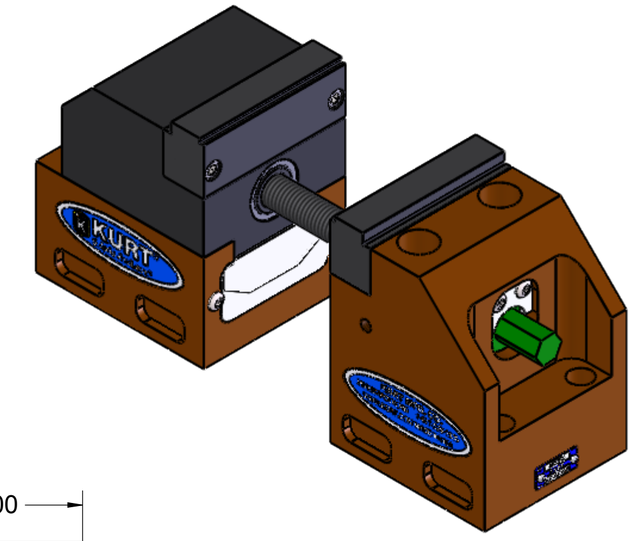

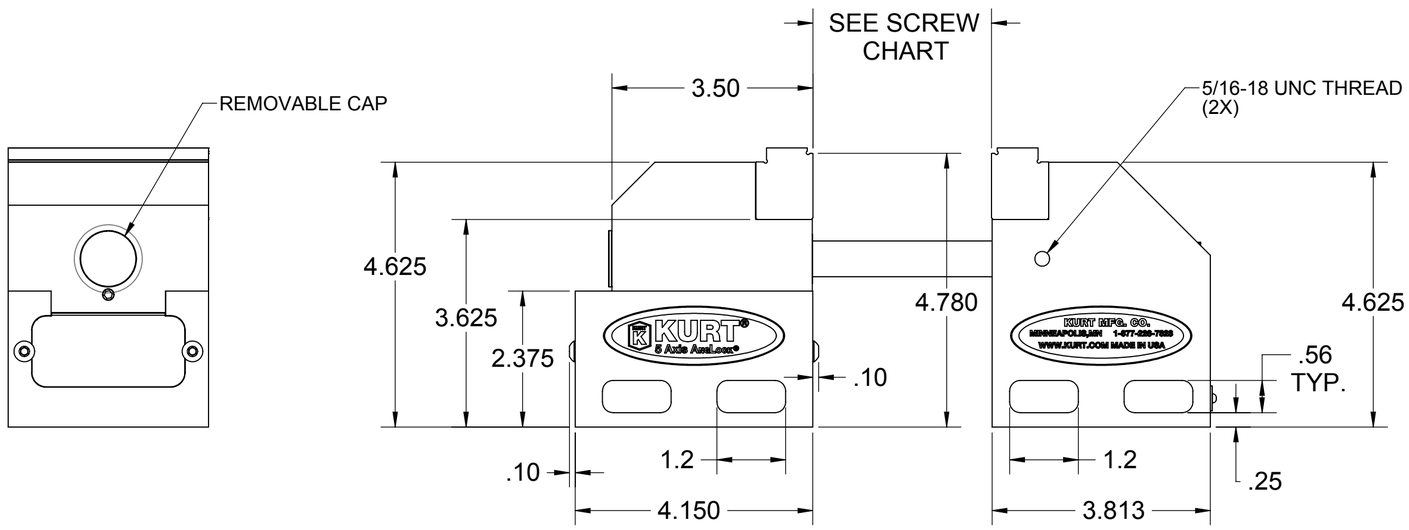

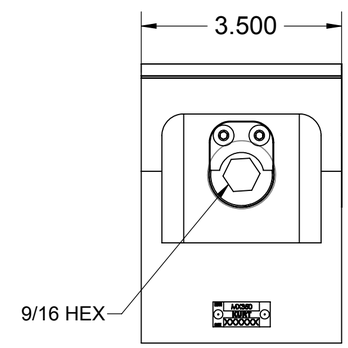

PART NUMBER	-A-	-B-
	4.625	2.95
	5.650	3.97

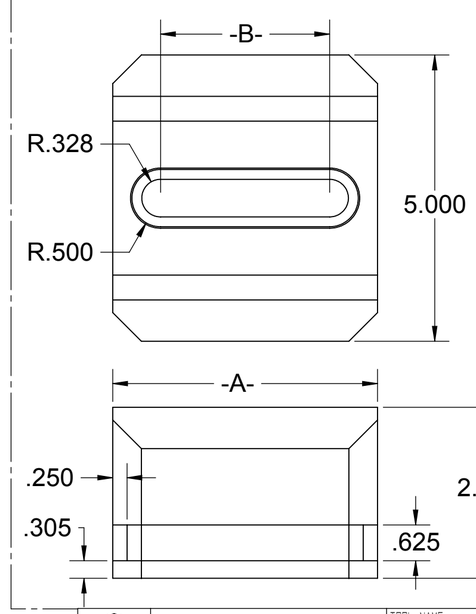

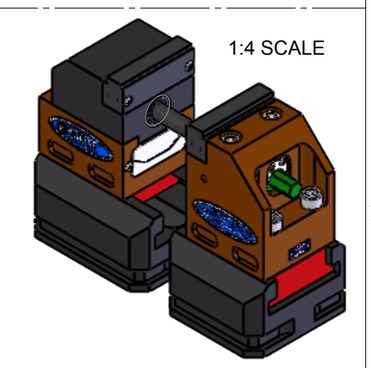

THE RISER (SHOWN BELOW)CAN BE ADDED FOR ADDITIONAL MACHINING HEIGHT PROVIDING MORE OPPORTUNITIES FOR ONE OPERATION MACHINING.

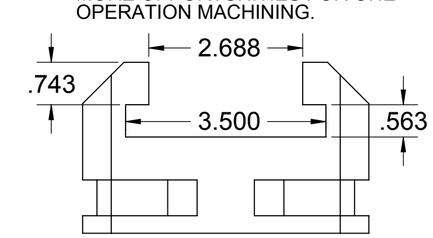

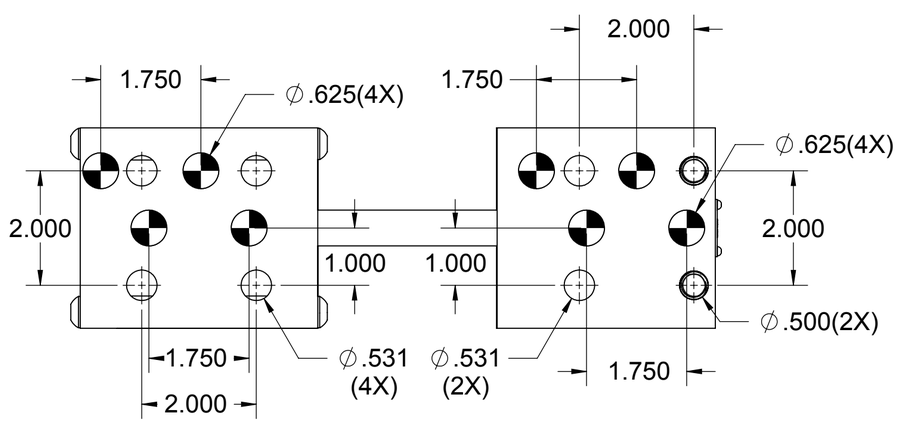

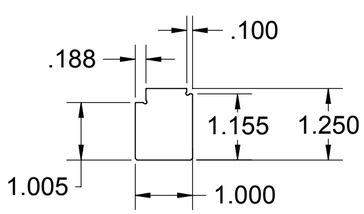

JAW PLATE DIMENSIONS

NOTE:
1) MINIMUM SCREW ENGAGEMENT IN NUT IS .70 OR 7.5 TURNS.

SCREW SELECTION CHART

SCREW LENGTH	MINIMUM JAW OPENING	MAXIMUM JAW OPENING
8.00	.15	3.5
12.00	3.5	7.5
18.00	7.5	11.5
24.00	11.5	15.5

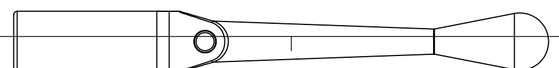

KURT MANUFACTURING COMPANY MINNEAPOLIS

TOLERANCES UNLESS NOTED INCHES
DECIMAL .X ± .05 .XXXX ± .0005
.XX ± .02 ANGLES ± 1°
.XXX ± .005

DESIGNED	D.SCHMIDT	6-15-10
DETAILED	D.SCHMIDT	6-15-10
CHECKED		
APPROVED		

TOOL NAME MX350 5 AXIS VISE

MODEL OF TOOL MX350

TITLE CATALOG DRAWING

DWG. SIZE C

KURT DWG.NO. –

REVISION LEVEL B

CUSTOMER – MX350

CUSTOMER PART NO. MX350

DESCRIPTION OR MATERIAL –

TOOL NO. –

SCALE 1:2

SHEET 1 OF 1